HW 6 Solution

2D-1-RR

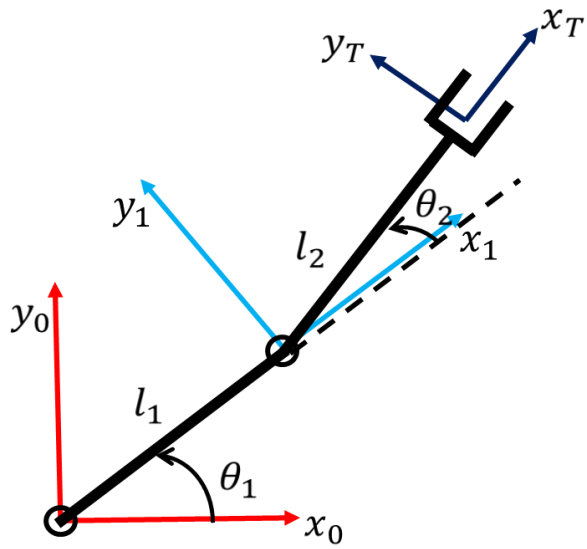

Fig1. 2D-1-RR

a. Newton-Euler Method

The transformation matrix for 2D-1-RR is

$$ {}^{0}_{1}T = \begin{bmatrix} c1 & -s1 & 0 & 0 \\ s1 & c1 & 0 & 0 \\ 0 & 0 & 1 & 0 \\ 0 & 0 & 0 & 1 \end{bmatrix} $$

$$ {}^{1}_{2}T = \begin{bmatrix} c2 & -s2 & 0 & l1 \\ s2 & c2 & 0 & 0 \\ 0 & 0 & 1 & 0 \\ 0 & 0 & 0 & 1 \end{bmatrix} $$

The position of the center of the mass

$$ {}^{1}P_{C1} = \begin{bmatrix} \frac{1}{2}l1 \\ 0 \\ 0 \end{bmatrix} $$

$$ {}^{2}P_{C2} = \begin{bmatrix} \frac{1}{2}l2 \\ 0 \\ 0 \end{bmatrix} $$

Momentum of inertial of center of mass

$$^{c1}I_1 = \frac{1}{12} m_1 {l_1}^2 \begin{bmatrix} 0 & 0 & 0 \\ 0 & 1 & 0 \\ 0 & 0 & 1 \end{bmatrix}$$

$$^{c2}I_1 = \frac{1}{12} m_2 {l_2}^2 \begin{bmatrix} 0 & 0 & 0 \\ 0 & 1 & 0 \\ 0 & 0 & 1 \end{bmatrix}$$

No extend force/torques on the end effector

$$f_3 = 0$$

$$n_3 = 0$$

The base of the robort is not rotating

$$w_0 = 0$$

$$\dot{w}_o = 0$$

To include gravity

$$^{0}\dot{v}_0 = \begin{bmatrix} 0 \\ g \\ 0 \end{bmatrix}$$

Outward iteration

$i = 0$

$$^{1}w_1 = {}^{1}_{0}R\,{}^{0}w_0 + \dot{\theta}_1 \hat{z}_1 = \begin{bmatrix} 0 \\ 0 \\ \dot{\theta}_1 \end{bmatrix}$$

$$^{1}\dot{w}_1 = {}^{1}_{0}R\ {}^{0}\dot{w}_0 + {}^{1}_{0}R\ {}^{0}w_0 \times \dot{\theta}_1 \hat{z}_1 + \ddot{\theta}_1 \hat{z}_1 = \begin{bmatrix} 0 \\ 0 \\ \ddot{\theta}_1 \end{bmatrix}$$

Linear velocity

$$^{1}\dot{v}_1 = {}^{1}_{0}R(\ {}^{0}\dot{w}_0 \times\ {}^{0}P_1 +\ {}^{0}w_0 \times (\ {}^{0}w_0 \times\ {}^{0}P_1 +\ {}^{0}\dot{v}_0) = \begin{bmatrix} gs1 \\ gc1 \\ 0 \end{bmatrix}$$

$$^{1}\dot{v}_{c1} = {}^{1}\dot{w}_1 \times\ {}^{1}P_{c1} +\ {}^{1}w_1 \times (\ {}^{1}w_1 \times\ {}^{1}P_{c1} +\ {}^{1}\dot{v}_1) = \begin{bmatrix} gs1 - \frac{1}{2} l1 {\dot{\theta}_1}^2 \\ gc1 + \frac{1}{2} l1 \ddot{\theta}_1 \\ 0 \end{bmatrix}$$

Outward iteration

$i = 0$

$$ {}^{1}F_1 = m_1\ {}^{1}\dot{v}_{c1} = m1\begin{bmatrix} gs1 - \frac{1}{2}l1\dot{\theta}_1{}^2 \\ gc1 + \frac{1}{2}l1\ddot{\theta}_1 \\ 0 \end{bmatrix} $$

$$ {}^{1}N_1 = \begin{bmatrix} 0 \\ 0 \\ \frac{1}{12}m_1 l1^2\ddot{\theta}_1 \end{bmatrix} $$

Outward iteration

$i = 1$

$$ {}^{2}w_2 = {}^{2}_{1}R\,{}^{1}w_1 + \dot{\theta}_2\ \widehat{{}^{2}z_2} = \begin{bmatrix} 0 \\ 0 \\ \dot{\theta}_1 + \dot{\theta}_2 \end{bmatrix} $$

$$ {}^{2}\dot{w}_2 = {}^{2}_{1}R\ {}^{1}\dot{w}_1 + {}^{2}_{1}R\ {}^{1}w_1 \times \dot{\theta}_2\ \widehat{{}^{2}z_2} + \ddot{\theta}_2\ \widehat{{}^{2}z_2} = \begin{bmatrix} 0 \\ 0 \\ \ddot{\theta}_1 + \ddot{\theta}_2 \end{bmatrix} $$

$$ {}^{2}\dot{v}_2 = {}^{2}_{1}R(\ {}^{1}\dot{w}_1 \times\ {}^{1}P_2 +\ {}^{1}w_1 \times (\ {}^{1}w_1 \times\ {}^{1}P_2 +\ {}^{1}\dot{v}_1) = \begin{bmatrix} l1\ddot{\theta}_1 s2 - l1\dot{\theta}_1{}^2 c2 + gs12 \\ l1\ddot{\theta}_1 s2 + l1\dot{\theta}_1{}^2 s2 + gc12 \\ 0 \end{bmatrix} $$

$$ {}^{2}\dot{v}_{c2} = {}^{2}_{1}R(\ {}^{2}\dot{w}_2 \times\ {}^{2}P_{c2} +\ {}^{2}w_2 \times (\ {}^{2}w_2 \times\ {}^{2}P_{c2} +\ {}^{2}\dot{v}_2) = $$

$$ \begin{bmatrix} 0 \\ \frac{1}{2}l2(\ddot{\theta}_1 + \ddot{\theta}_2) \\ 0 \end{bmatrix} + \begin{bmatrix} -\frac{1}{2}l2(\dot{\theta}_1 + \dot{\theta}_2)^2 \\ 0 \\ 0 \end{bmatrix} + \begin{bmatrix} l1\ddot{\theta}_1 s2 - l1\dot{\theta}_1{}^2 c2 + gs12 \\ l1\ddot{\theta}_1 s2 + l1\dot{\theta}_1{}^2 s2 + gc12 \\ 0 \end{bmatrix} = \begin{bmatrix} m_2(l1\ddot{\theta}_1 s2 - l1\dot{\theta}_1{}^2 c2 + gs12 - \frac{1}{2}l2(\dot{\theta}_1 + \dot{\theta}_2)^2) \\ m_2(l1\ddot{\theta}_1 s2 + l1\dot{\theta}_1{}^2 s2 + gc12 + \left(\frac{1}{2}\right) * l2(\ddot{\theta}_1 + \ddot{\theta}_2)) \\ 0 \end{bmatrix} $$

$$ {}^{2}F_2 = m_2\ {}^{2}\dot{v}_{c2} $$

$$ {}^{2}N_2 = \begin{bmatrix} 0 \\ 0 \\ \frac{1}{12} m_2 l2^2 (\ddot{\theta}_1 + \ddot{\theta}_2) \end{bmatrix} $$

Inward iteration

$i = 2$

$$ {}^{2}\mathrm{f}_2 = {}^{2}_{3}R\ {}^{3}f_3 + {}^{2}F_2 = {}^{2}F_2 = m_2\ {}^{2}\dot{v}_{c2} $$

$$ {}^{2}\mathrm{n}_2 = {}^{2}_{3}R\ {}^{3}n_3 + {}^{2}N_2 + {}^{2}P_{c2} \times {}^{2}F_2 = \begin{bmatrix} i & j & k \\ \frac{1}{2} l2 & 0 & 0 \\ {}^{2}F_{2x} & {}^{2}F_{2y} & 0 \end{bmatrix} = $$

$$ \begin{bmatrix} 0 \\ 0 \\ \frac{1}{12} m_2 l2^2 (\ddot{\theta}_1 + \ddot{\theta}_2) \end{bmatrix} + \left(\frac{1}{2}\right) l2 \begin{bmatrix} 0 \\ 0 \\ m_2 (l1\ddot{\theta}_1 s2 + l1\dot{\theta}_1{}^2 s2 + gc12 + \left(\frac{1}{2}\right) l2 (\ddot{\theta}_1 + \ddot{\theta}_2)) \end{bmatrix} = $$

$$ \begin{bmatrix} 0 \\ 0 \\ m_2 l2 (l1\ddot{\theta}_1 s2 + l1\dot{\theta}_1{}^2 s2 + gc12 + \left(\frac{1}{3}\right) * l2 (\ddot{\theta}_1 + \ddot{\theta}_2)) \end{bmatrix} $$

Inward

$i = 1$

$$ {}^{1}\mathrm{f}_1 = {}^{1}_{2}R\ {}^{2}f_2 + {}^{1}F_1 = $$

$$ \begin{bmatrix} c2 & -s2 & 0 \\ s2 & c2 & 0 \\ 0 & 0 & 1 \end{bmatrix} \begin{bmatrix} m_2 (l1\ddot{\theta}_1 s2 - l1\dot{\theta}_1{}^2 c2 + gs12 - \frac{1}{2} l2 (\dot{\theta}_1 + \dot{\theta}_2)^2) \\ m_2 (l1\ddot{\theta}_1 s2 + l1\dot{\theta}_1{}^2 s2 + gc12 + \left(\frac{1}{2}\right) * l2 (\ddot{\theta}_1 + \ddot{\theta}_2)) \\ 0 \end{bmatrix} + m1 \begin{bmatrix} gs1 - \frac{1}{2} l1\dot{\theta}_1{}^2 \\ gc1 + \frac{1}{2} l1\ddot{\theta}_1 \\ 0 \end{bmatrix} = $$

$$ \begin{bmatrix} m_2 c2 \left(l1\ddot{\theta}_1 s2 - l1\dot{\theta}_1{}^2 c2 + gs12 - \frac{1}{2} l2 \left(\dot{\theta}_1 + \dot{\theta}_2\right)^2\right) + m1 \left(gs1 - \frac{1}{2} l1\dot{\theta}_1{}^2\right) - m_2 s2 (l1\ddot{\theta}_1 s2 + l1\dot{\theta}_1{}^2 s2 + gc12 + \left(\frac{1}{2}\right) * l2 (\ddot{\theta}_1 + \ddot{\theta}_2)) \\ m_2 s2 \left(l1\ddot{\theta}_1 s2 - l1\dot{\theta}_1{}^2 c2 + gs12 - \frac{1}{2} l2 \left(\dot{\theta}_1 + \dot{\theta}_2\right)^2\right) + m1 \left(gc1 + \frac{1}{2} l1\ddot{\theta}_1\right) + m_2 c2 (l1\ddot{\theta}_1 s2 + l1\dot{\theta}_1{}^2 s2 + gc12 + \left(\frac{1}{2}\right) * l2 (\ddot{\theta}_1 + \ddot{\theta}_2)) \\ 0 \end{bmatrix} $$

$$
{}^{1}\mathrm{n}_1 = {}^{1}_{2}R\ {}^{2}n_2 + {}^{1}N_1 + {}^{1}P_{c1} \times {}^{1}F_1 + {}^{1}P_2 \times {}^{1}_{2}R\ {}^{2}f_2
$$

$$
= \begin{bmatrix} 0 \\ 0 \\ \frac{1}{12} m_1 l1^2 \ddot{\theta}_1 \end{bmatrix} + \begin{bmatrix} 0 \\ 0 \\ \left(\frac{l1}{2}\right) * m1 * (gc1 + \frac{1}{2} l1\ddot{\theta_1}) \end{bmatrix}
$$

$$
+ \begin{bmatrix} 0 \\ 0 \\ \left(\frac{l1}{2}\right)(s2m_2\left(l1\ddot{\theta}_1 s2 - l1\dot{\theta}_1{}^2 c2 + gs12 - \frac{1}{2} l2\left(\dot{\theta}_1 + \dot{\theta}_2\right)^2\right) + c2m_2(l1\ddot{\theta}_1 s2 + l1\dot{\theta}_1{}^2 s2 + gc12 + \left(\frac{1}{2}\right) * l2(\ddot{\theta}_1 + \ddot{\theta}_2))) \end{bmatrix}
$$

b. Lagrangian Method

Kinetic Energy:

For $i = 1$

$$k_1 = \frac{1}{2} m_1 l1^2 \dot{\theta_1}^2 + \frac{1}{2} I_1 \dot{\theta_1}^2 = \frac{1}{2} m_1 l1^2 \dot{\theta_1}^2$$

Position of center of mass

$$^0P_{g2} = \begin{bmatrix} l1c1 + l2c12 \\ l1s1 + l2s12 \end{bmatrix}$$

The derivative squared gives

$$^0v_{c2} = \begin{bmatrix} -l1s1\dot{\theta}_1 - l2s12(\dot{\theta}_1 + \dot{\theta}_2) \\ l1c1\dot{\theta}_1 + l2c12(\dot{\theta}_1 + \dot{\theta}_2) \end{bmatrix}$$

$$v_{c2}{}^T v_{c2} = l1^2 \theta_1{}^2 + l2^2(\dot{\theta}_1 + \dot{\theta}_2)^2 + 2l1l2c2(\dot{\theta_1}^2 + \dot{\theta}_1\dot{\theta}_2)$$

For $i = 2$

$$k_2 = \frac{1}{2} m_2 (l1^2 \theta_1{}^2 + l2^2(\dot{\theta}_1 + \dot{\theta}_2)^2 + 2l1l2c2(\dot{\theta_1}^2 + \dot{\theta}_1\dot{\theta}_2)) + \frac{1}{2} I_2 (\dot{\theta}_1 + \dot{\theta}_2)^2$$

Potential Energy:

For $i = 1$

$$p_1 = m_1 g l1s1$$

For $i = 2$

$$p_2 = m_2 g(l1s1 + l2s12)$$

Lagrangian:

$$\mathrm{L} = k_1 + k_2 - p_1 - p_2$$

Solving:

$$\tau_1 = [m_1 l1 + m_2(l1^2 + l2^2 + 2l1l2c2)]\ddot{\theta}_1 + m_2(l2^2 + l1l2c2)\ddot{\theta}_2 - m_2 l1l2s2\left(2\dot{\theta}_1\dot{\theta}_2 + \dot{\theta_2}^2\right) + m1gl1c1 + m2g(l1c1 + l2c12)$$

$$\tau_2 = [m_2(l2^2 + l1l2c2)]\ddot{\theta}_1 + m_2 l2\ddot{\theta}_2 + m_2 l1l2s2\left(\dot{\theta_1}^2\right) + m2gl2c12$$

3D-1-RRR

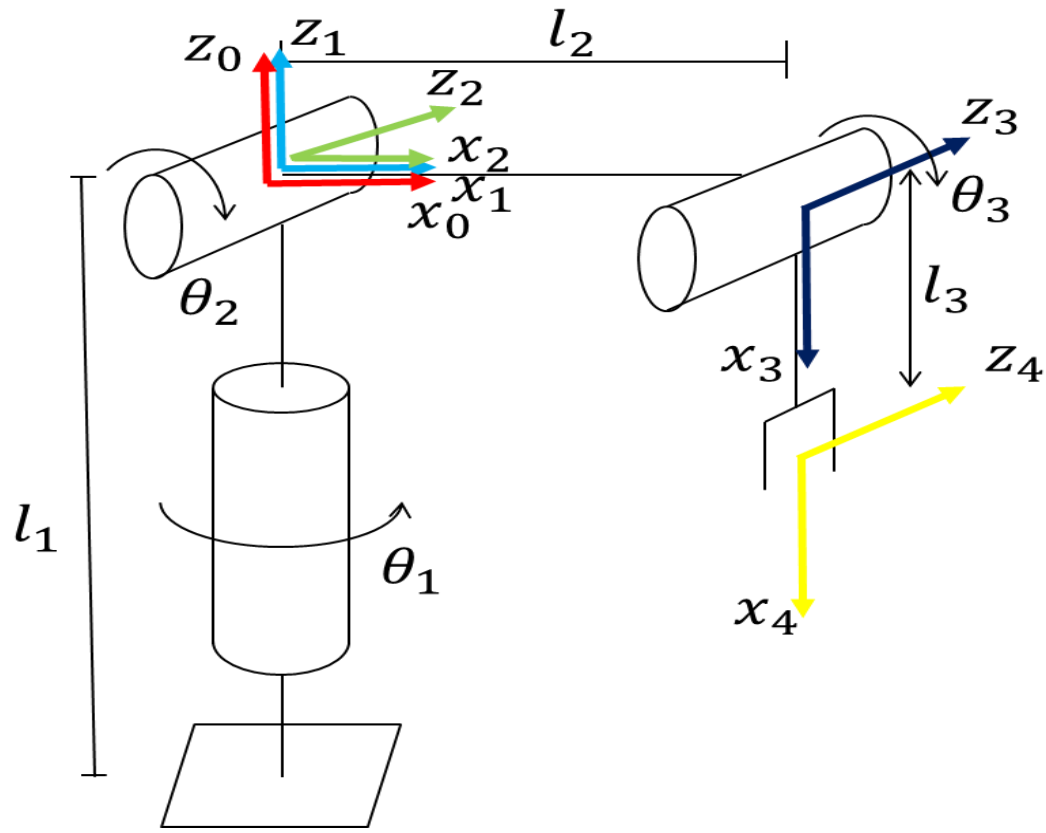

Fig.1 3D-1-RRR

a. Newton Euler Method

The position of the center of the mass

$$^{1}P_{C1} = \begin{bmatrix} 0 \\ 0 \\ l_{c1} \end{bmatrix}$$

$$^{2}P_{C2} = \begin{bmatrix} l_{c2} \\ 0 \\ 0 \end{bmatrix}$$

$$^{3}P_{C3} = \begin{bmatrix} l_{c3} \\ 0 \\ 0 \end{bmatrix}$$

Momentum of inertial of center of mass

$$^{c2}I_2 = \frac{1}{12} m_2 {l_{c2}}^2 \begin{bmatrix} 0 & 0 & 0 \\ 0 & 1 & 0 \\ 0 & 0 & 1 \end{bmatrix}$$

$$^{c3}I_3 = \frac{1}{12} m_3 {l_{c3}}^2 \begin{bmatrix} 0 & 0 & 0 \\ 0 & 1 & 0 \\ 0 & 0 & 1 \end{bmatrix}$$

$$^{c1}I_1 = 0$$

No extend force/torques on the end effector

$$f_4 = 0$$

$$n_4 = 0$$

The base of the robort is not rotating

$$w_0 = 0$$

$$\dot{w}_o = 0$$

To include gravity

$$^{0}\dot{v}_0 = \begin{bmatrix} 0 \\ 0 \\ g \end{bmatrix}$$

Outward iteration

$i = 0$

$$^{1}w_1 = {}^{1}_{0}R\,{}^{0}w_0 + \dot{\theta}_1 \hat{z}_1 = \begin{bmatrix} 0 \\ 0 \\ \dot{\theta}_1 \end{bmatrix}$$

$$^{1}\dot{w}_1={}^{1}_{0}R\ {}^{0}\dot{w}_0+{}^{1}_{0}R\ {}^{0}w_0 \times \dot{\theta}_1\widehat{z_1} + \ddot{\theta}_1\widehat{z_1}=\begin{bmatrix}0\\0\\\ddot{\theta}_1\end{bmatrix}$$

Linear velocity

$$^{1}\dot{v}_1={}^{1}_{0}R(\ {}^{0}\dot{w}_0 \times\ {}^{0}P_1 +\ {}^{0}w_0 \times (\ {}^{0}w_0 \times\ {}^{0}P_1 +\ {}^{0}\dot{v}_0) = \begin{bmatrix}0\\0\\g\end{bmatrix}$$

$$^{1}\dot{v}_{c1}=\ {}^{1}\dot{w}_1 \times\ {}^{1}P_{c1} +\ {}^{1}w_1 \times (\ {}^{1}w_1 \times\ {}^{1}P_{c1} +\ {}^{1}\dot{v}_1) = \begin{bmatrix}0\\0\\g\end{bmatrix}$$

$$^{1}F_1 = m_1\ {}^{1}\dot{v}_{c1} = m1\begin{bmatrix}0\\0\\m_1 g\end{bmatrix}$$

$$^{1}N_1 = \begin{bmatrix}0\\0\\0\end{bmatrix}$$

Outward iteration

$i = 1$

$$^{2}w_2={}^{2}_{1}R\,{}^{1}\mathrm{w}_1+\dot{\theta}_2\ \widehat{{}^{2}z_2}=\begin{bmatrix}-\dot{\theta}_1 s2\\-\dot{\theta}_1 c2\\\dot{\theta}_2\end{bmatrix}$$

$$^{2}\dot{w}_2={}^{2}_{1}R\ {}^{1}\dot{w}_1+{}^{2}_{1}R\ {}^{1}w_1 \times \dot{\theta}_2\ \widehat{{}^{2}z_2} + \ddot{\theta}_2\ \widehat{{}^{2}z_2}=\begin{bmatrix}-\ddot{\theta}_1 s2\\-\ddot{\theta}_1 c2\\\ddot{\theta}_2\end{bmatrix}$$

$$^{2}\dot{v}_2={}^{2}_{1}R(\ {}^{1}\dot{w}_1 \times\ {}^{1}P_2 +\ {}^{1}w_1 \times (\ {}^{1}w_1 \times\ {}^{1}P_2 +\ {}^{1}\dot{v}_1) = \begin{bmatrix}-gs2\\-gc2\\0\end{bmatrix}$$

$$^{2}\dot{v}_{c2}={}^{2}_{1}R(\ {}^{2}\dot{w}_2 \times\ {}^{2}P_{c2} +\ {}^{2}w_2 \times (\ {}^{2}w_2 \times\ {}^{2}P_{c2} +\ {}^{2}\dot{v}_2) = \begin{bmatrix}l_{c2}c2{}^{2}\dot{\theta}_1{}^{2} + l_{c2}\dot{\theta}_2{}^{2} - s2g\\-l_{c2}\ddot{\theta}_2 - l_{c2}s2c2\ \ \dot{\theta}_1{}^{2} - c2g\\l_{c2}c2\ddot{\theta}_1\end{bmatrix}$$

$$^{2}F_2 = m_2\ {}^{2}\dot{v}_{c2}=m_2\begin{bmatrix}l_{c2}c2{}^{2}\dot{\theta}_1{}^{2} + l_{c2}\dot{\theta}_2{}^{2} - s2g\\-l_{c2}\ddot{\theta}_2 - l_{c2}s2c2\ \ \dot{\theta}_1{}^{2} - c2g\\l_{c2}c2\ddot{\theta}_1\end{bmatrix}$$

$$ {}^{2}N_2 = \begin{bmatrix} 0 \\ -\frac{1}{12} m_2 {l_{c2}}^2 c2\ddot{\theta}_1 \\ \frac{1}{12} m_2 {l_{c2}}^2 \ddot{\theta}_2 + m_2 s2c2{\dot{\theta}_1}^2 l_{c2} \end{bmatrix} $$

Outward iteration

$i = 2$

$$ {}^{3}w_3 = {}^{3}_{2}R\,{}^{2}w_2 + \dot{\theta}_3\ \widehat{{}^{3}z_3} = \begin{bmatrix} -\dot{\theta}_1 s23 \\ -\dot{\theta}_1 c23 \\ \dot{\theta}_2 + \dot{\theta}_3 \end{bmatrix} $$

$$ {}^{3}\dot{w}_3 = {}^{3}_{2}R\ {}^{2}\dot{w}_2 + {}^{3}_{2}R\ {}^{2}w_2 \times \dot{\theta}_3\ \widehat{{}^{3}z_3} + \ddot{\theta}_3\ \widehat{{}^{3}z_3} = \begin{bmatrix} -\ddot{\theta}_1 s23 - c23\dot{\theta}_1(\dot{\theta}_2 + \dot{\theta}_3) \\ -\ddot{\theta}_1 c23 + s23\dot{\theta}_1(\dot{\theta}_2 + \dot{\theta}_3) \\ \ddot{\theta}_2 + \ddot{\theta}_3 \end{bmatrix} $$

$$ {}^{3}\dot{v}_3 = \begin{bmatrix} c3\left(l_{c3}c2^2{\dot{\theta}_1}^2 + l_{c3}{\dot{\theta}_2}^2 - s2g\right) + s3\left(l_{c3}c2^2{\dot{\theta}_1}^2 + l_{c3}{\dot{\theta}_2}^2 - s2g\right) \\ -s3\left(-l_{c3}\ddot{\theta}_2 - l_{c3}s2c2\ \ {\dot{\theta}_1}^2 - c2g\right) + c3\left(-l_{c3}\ddot{\theta}_2 - l_{c3}s2c2\ \ {\dot{\theta}_1}^2 - c2g\right) \\ l_{c3}c2\ddot{\theta}_1 \end{bmatrix} $$

$$ {}^{3}\dot{v}_{c3} = $$

$$ \begin{bmatrix} c3\left(l_{c3}c2^2{\dot{\theta}_1}^2 + l_{c3}{\dot{\theta}_2}^2 - s2g\right) + s3\left(l_{c3}c2^2{\dot{\theta}_1}^2 + l_{c3}{\dot{\theta}_2}^2 - s2g\right) - l_{c3}c23^2{\dot{\theta}_1}^2 + l_{c3}(\dot{\theta}_2 + \dot{\theta}_3)^2 \\ -s3\left(-l_{c3}\ddot{\theta}_2 - l_{c3}s2c2\ \ {\dot{\theta}_1}^2 - c2g\right) + c3\left(-l_{c3}\ddot{\theta}_2 - l_{c3}s2c2\ \ {\dot{\theta}_1}^2 - c2g\right) - l_{c3}(\ddot{\theta}_2 + \ddot{\theta}_3) - l_{c3}s23c23{\dot{\theta}_1}^2 \\ l_{c3}c2\ddot{\theta}_1 + l_{c3}s23\ddot{\theta}_1 \end{bmatrix} $$

$$ {}^{3}F_3 = m_3\ {}^{3}\dot{v}_{c3} = $$

$$ m_3 \begin{bmatrix} c3\left(l_{c3}c2^2{\dot{\theta}_1}^2 + l_{c3}{\dot{\theta}_2}^2 - s2g\right) + s3\left(l_{c3}c2^2{\dot{\theta}_1}^2 + l_{c3}{\dot{\theta}_2}^2 - s2g\right) - l_{c3}c23^2{\dot{\theta}_1}^2 + l_{c3}(\dot{\theta}_2 + \dot{\theta}_3)^2 \\ -s3\left(-l_{c3}\ddot{\theta}_2 - l_{c3}s2c2\ \ {\dot{\theta}_1}^2 - c2g\right) + c3\left(-l_{c3}\ddot{\theta}_2 - l_{c3}s2c2\ \ {\dot{\theta}_1}^2 - c2g\right) - l_{c3}(\ddot{\theta}_2 + \ddot{\theta}_3) - l_{c3}s23c23{\dot{\theta}_1}^2 \\ l_{c3}c2\ddot{\theta}_1 + l_{c3}s23\ddot{\theta}_1 \end{bmatrix} $$

$$ {}^{3}N_3 = \begin{bmatrix} -\frac{1}{12} m_3 {l_{c3}}^2 c23\dot{\theta}_1\dot{\theta}_2 + \frac{1}{12} m_3 {l_{c3}}^2 c23\dot{\theta}_1\dot{\theta}_2 \\ \frac{1}{12} m_3 {l_{c3}}^2\left(-\ddot{\theta}_1 c23 + s23\dot{\theta}_1(\dot{\theta}_2 + \dot{\theta}_3)\right) - \frac{1}{12} m_3 {l_{c3}}^2 s23\dot{\theta}_1\dot{\theta}_2 \\ \frac{1}{12} m_3 {l_{c3}}^2(\ddot{\theta}_2 + \ddot{\theta}_3) + \frac{1}{12} m_3 {l_{c3}}^2 c23s2\dot{3}\theta_1\dot{\theta}_1 \end{bmatrix} $$

Inward iteration

$i = 3$

$$ {}^{3}\mathrm{f}_3 = {}^{3}F_3 = m_3 \begin{bmatrix} c3\left(l_{c3}c2^2\dot{\theta}_1{}^2 + l_{c3}\dot{\theta}_2{}^2 - s2g\right) + s3\left(l_{c3}c2^2\dot{\theta}_1{}^2 + l_{c3}\dot{\theta}_2{}^2 - s2g\right) - l_{c3}c23^2\dot{\theta}_1{}^2 + l_{c3}(\dot{\theta}_2 + \dot{\theta}_3)^2 \\ -s3\left(-l_{c3}\ddot{\theta}_2 - l_{c3}s2c2\ \ \dot{\theta}_1{}^2 - c2g\right) + c3\left(-l_{c3}\ddot{\theta}_2 - l_{c3}s2c2\ \ \dot{\theta}_1{}^2 - c2g\right) - l_{c3}\left(\ddot{\theta}_2 + \ddot{\theta}_3\right) - l_{c3}s23c23\dot{\theta}_1{}^2 \\ l_{c3}c2\ddot{\theta}_1 + l_{c3}s23\ddot{\theta}_1 \end{bmatrix} $$

$$ {}^{3}\mathrm{n}_3 = \begin{bmatrix} -\frac{1}{12}m_3 l_{c3}{}^2 c23\dot{\theta}_1\dot{\theta}_2 + \frac{1}{12}m_3 l_{c3}{}^2 c23\dot{\theta}_1\dot{\theta}_2 \\ \frac{1}{12}m_3 l_{c3}{}^2\left(-\ddot{\theta}_1 c23 + s23\dot{\theta}_1\left(\dot{\theta}_2 + \dot{\theta}_3\right)\right) - \frac{1}{12}m_3 l_{c3}{}^2 s23\dot{\theta}_1\dot{\theta}_2 \\ \frac{1}{12}m_3 l_{c3}{}^2\left(\ddot{\theta}_2 + \ddot{\theta}_3\right) + \frac{1}{12}m_3 l_{c3}{}^2 c23s23\dot{\theta}_1\dot{\theta}_1 \end{bmatrix} + $$

$$ \begin{bmatrix} 0 \\ 0 \\ l_{c3}m_3(-s3\left(-l_{c3}\ddot{\theta}_2 - l_{c3}s2c2\ \ \dot{\theta}_1{}^2 - c2g\right) + c3\left(-l_{c3}\ddot{\theta}_2 - l_{c3}s2c2\ \ \dot{\theta}_1{}^2 - c2g\right) - l_{c3}\left(\ddot{\theta}_2 + \ddot{\theta}_3\right) - l_{c3}s23c23\dot{\theta}_1{}^2) \end{bmatrix} $$

$i = 2$

$$ {}^{2}\mathrm{f}_2 = {}^{2}_{3}R\ {}^{3}f_3 + {}^{2}F_2 $$

$$ {}^{2}\mathrm{n}_2 = {}^{2}_{3}R\ {}^{3}n_3 + {}^{2}N_2 + {}^{2}P_{c2} \times {}^{2}F_2 = \begin{bmatrix} i & j & k \\ \frac{1}{2}l2 & 0 & 0 \\ {}^{2}F_{2x} & {}^{2}F_{2y} & 0 \end{bmatrix} $$

Inward

$i = 1$

$$ {}^{1}\mathrm{f}_1 = {}^{1}_{2}R\ {}^{2}f_2 + {}^{1}F_1 $$

$$ {}^{1}\mathrm{n}_1 = {}^{1}_{2}R\ {}^{2}n_2 + {}^{1}N_1 + {}^{1}P_{c1} \times {}^{1}F_1 + {}^{1}P_2 \times {}^{1}_{2}R\ {}^{2}f_2 $$

b. Lagrangian Method

$$ {}^{0}J_{v1} = \begin{bmatrix} 0 & 0 & 0 \\ 0 & 0 & 0 \\ 0 & 0 & 0 \end{bmatrix} $$

$$ {}^{0}J_{w1} = \begin{bmatrix} 0 & 0 & 0 \\ 0 & 0 & 0 \\ 1 & 0 & 0 \end{bmatrix} $$

$$ {}^{0}J_{v2} = \begin{bmatrix} -c2s1l_{c2} & -c1s2l_{c2} & 0 \\ c1c2l_{c2} & -s2s1l_{c2} & 0 \\ 0 & 0 & -c2c1^2l_{c2} - c2s1^2l_{c2} \end{bmatrix} $$

$$ {}^{0}J_{w2} = \begin{bmatrix} 0 & -s1 & 0 \\ 0 & c1 & 0 \\ 1 & 0 & 0 \end{bmatrix} $$

$$ {}^{0}J_{v3} = \begin{bmatrix} -c2s1l_2 + s1s23l_{c3} & -c1c23l_{c3} - c1s2l_2 & -c1c23l_{c3} \\ c1c2l_2 - c1s23l_{c3} & -s23s1l_{c3} - s2s1l_2 & -c23s1l_{c3} \\ 0 & s1(-c2s1l_2 + s1s23l_{c3}) - c1(c1c2l_2 - c1s23l_{c3}) & s1(s1s23l_{c3}) + c1(c1s23l_{c3}) \end{bmatrix} $$

$$ {}^{0}J_{w3} = \begin{bmatrix} 0 & -s1 & -s1 \\ 0 & c1 & c1 \\ 1 & 0 & 0 \end{bmatrix} $$

$$ \boldsymbol{M} = {}^{0}J_{v1}{}^{T} m_1 \, {}^{0}J_{v1} + {}^{0}J_{v2}{}^{T} m_2 \, {}^{0}J_{v2} + {}^{0}J_{v3}{}^{T} m_3 \, {}^{0}J_{v3} + {}^{0}J_{w1}{}^{T} \, {}^{0}I_1 \, {}^{0}J_{w1} + {}^{0}J_{w2}{}^{T} \, {}^{0}I_2 \, {}^{0}J_{w2} + {}^{0}J_{w3}{}^{T} \, {}^{0}I_3 \, {}^{0}J_{w3} $$

$$ {}^{0}I_1 = 0 $$

$$ {}^{0}I_2 = \frac{1}{12} m_2 l_{c2}{}^2 \begin{bmatrix} s1^2 + c1^2s2^2 & -c1c2^2s1 & s2c1c2 \\ -c1c2^2s1 & s1^2s2^2 - s2^2 + 1 & c2s1s2 \\ c1c2s2 & c2s1s2 & c2^2 \end{bmatrix} $$

$$ {}^{0}I_3 = \frac{1}{12} m_3 l_{c3}{}^2 \begin{bmatrix} s1^2 + c1^2s23^2 & -c1c23^2s1 & s23c1c23 \\ -c1c23^2s1 & s1^2s23^2 - s1^2 + 1 & c23s1s23 \\ c1c23s23 & c23s1s23 & c23^2 \end{bmatrix} $$

$$ \mathrm{G} = \begin{bmatrix} G_1 \\ G_2 \\ G_3 \end{bmatrix} = \begin{bmatrix} 0 \\ -g(m_2 l_{c2} c2 + m_3 l_{c3} c23) \\ -gc23m_3 l_{c3} + gc2m_3 l_2 \end{bmatrix} $$

Velocity coupler

Torque

$$\begin{bmatrix} \tau_1 \\ \tau_2 \\ \tau_3 \end{bmatrix} = \boldsymbol{M} \begin{bmatrix} \ddot{\theta}_1 \\ \ddot{\theta}_2 \\ \ddot{\theta}_3 \end{bmatrix} + \boldsymbol{V} + \boldsymbol{G}$$